ellenox

ELECTRIC VEHICLE CHARGER

Model: Model 1
Turbo 1

READ AND SAVE THESE INSTRUCTIONS
Installer: Leave this manual with the homeowner

TABLE OF CONTENTS

SAFETY INSTRUCTIONS 3

USER INSTRUCTIONS 4

- PARAMETERS SHEET 4
- PRODUCT DESCRIPTION 5
- PRODUCT DIMENSIONS 5
- INDICATOR LIGHT 6
- FUNCTION INSTRUCTION 6
- LCD DISPLAY 7

INSTALLATION INSTRUCTIONS 8

- UNPACKING 8
- TOOLS/MATERIALS REQUIRED 8
- ATTACHMENT 8
- BEFORE INSTALLATION 9
- INSTALLATION LOCATION 9
- WARNING 9
- CONNECT ELECTRICAL WIRING 10
- INSTALLATION 10
- SET THE CHARGER POWER 20
- INSPECTION 20

APP INSTRUCTION 21

- REGISTER 21
- ADD DEVICE 21
- OPERATE INTRODUCTION 19
- FAULT INTERFACE 25
- ALARM 26
- CARD REGISTRATION 26

MAINTENANCE 27

TROUBLESHOOTING 27

SAFETY INSTRUCTIONS

Important note: Please read this booklet before installing and switching on this appliance. The manufacturer assumes no responsibility for incorrect installation and usage as described in this booklet. Keep the instruction book for future reference. All the information in the manual is valid for the charging station model in this manual.

This instruction book details the install guidance for the charger. If you're unsure which model you have, please check the rating label on the charger.

The unit is designed for installations inside or outside, with the Innovative safety systems we have built into the charger ensuring its safe usage. This guidance provides information to assist when installing the unit. The charger must be professionally installed by a qualified electrician according to local and national regulations applicable at the time of installation and used in accordance with the manufacturer's instructions.

● This unit must be grounded (Earthed).
● This unit is only to be installed by a qualified electrician in accordance with local building and electrical codes and standards.
● This unit is designed to connect a electrical supply voltage of AC220V~240V 50/60Hz for single phase series and AC380V~415V 50/60Hz for Three-phase series.
● The charger must be installed on a secure solid surface that can support the weight of the charger. Failure to install on a secure surface or not in accordance with electrical regulations could lead to death, personal injury, or property damage.
● This appliance is designed to be used by adults, do not allow children to play with the appliance or let them hang over the charger.
● Do not put fingers into the socket or connector.
● This unit is not suitable for use in dangerous places where there is high amounts of dust, dangerous gas or in an explosive and flammable environment.
● In order to ensure the electrical safety of the unit, the product body shell must be fixed to the correct position with fasteners that come with the product and the seals used to ensure the IP rating is maintained.
● The unit's inlet position (front face) must be tightly sealed to be waterproof and dustproof to ensure the products IP rating.
● Do not use this unit other than its intended purpose.
● Do not use if the socket or connector or cable is damaged.
● Disconnect the charging from the vehicle prior to driving off.
● To prevent electrical shock, do not plug-in or un-plug with wet hands .
● Do not use a power washer to clean or wash the car charger.
● It is recommended not to use in a location that can be reached by rain, suggest increase rain protection measures.
● Do not install in areas of high-risk chance of impact by vehicles or a high risk of trip hazard.

Important: Under no circumstances will compliance with the information in this manual relieve the user of his/her responsibility to comply with all applicable codes or safety standards.

USER INSTRUCTIONS

PARAMETERS SHEET

Item	Datasheet \ Model	Model 1	Turbo 1
Input	Power Supply	1P+N+PE	3P+N+PE
	Rated Voltage	AC220 ~ 240V 50/60Hz	AC380 ~ 415V 50/60Hz
	Rated current	Max 32A (6-32A adjustable)	
Output	Output Voltage	AC220 ~ 240V 50/60Hz	AC380 ~ 415V 50/60Hz
	Maximum Current	Max 32A (6-32A adjustable)	
	Rated Power	7.4 kW	22 kW
User interface	Charger socket or connector	Type 2	
	Material	ABS +PC Flammability Rating V - 0	
	Colour	Black	
	Indicator light	LED Light	
Safety	Ingress Protection	Enclosure:IP65 Connector:IP54	
	PCB protection	Over current protection , The max 32A-Recommended 36A	
		Residual current protection(AC TYPE A 30mA, DC6mA)	
		PEN protection	
		Earth check	
		Over/Under voltage protection	
		Over temperature	
	Certification	CE,UKCA	
	Certification Standard	EN 61851,EN 62196	
Power consumption	Standby power consumption	<10W	
Enviroment	Installation	Wall mounted	
	Work Temperature	-25℃~50℃	
	Work Humidity	3%~95%	
	Work Altitude	<2000m	

USER INSTRUCTIONS

PRODUCT DESCRIPTION

1. Front Cover
2. RFID Area
3. Working Status Indicator
4. Function Button
5. Cable Holder
6. Charging Lead and Connector

PRODUCT DIMENSIONS

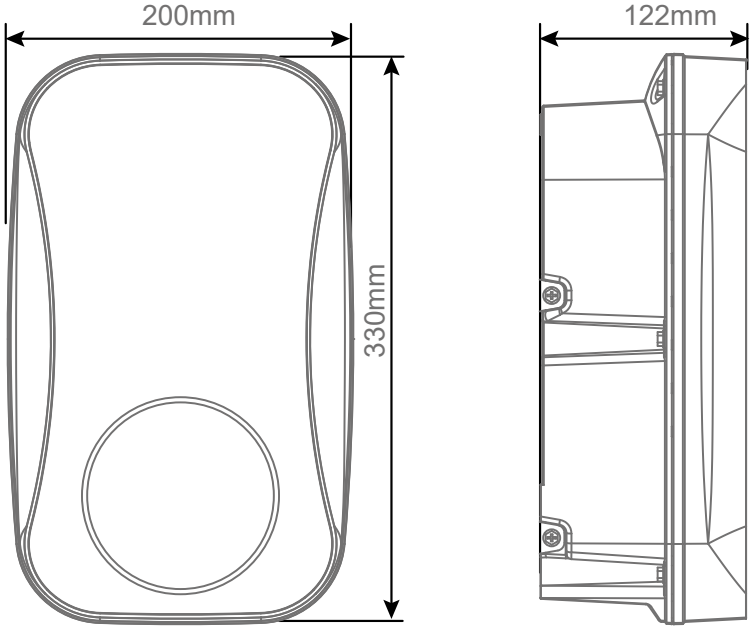

USER INSTRUCTIONS

INDICATOR LIGHT

Light Display Status	Product Status
Blue, green and red flashing alternately	Product power-on self-check
Blue light glowing	Standby
Blue light flashing	Connection confirmation
Green light glowing	Charging
Green light flashing	Disconnect charging from APP or OCPP
Red light glowing	Over temperature
Red light flashing one fast, one slow	Emergency stop
Yellow light glowing	Configuring

FUNCTION INSTRUCTION

Function	Operation	Status indicators	Remark
Emergency Stop	During normal charging, press once	Red light flashing One fast, one slow	Un-plug the connector
Mode Toggle	On standby statue: Under APP control mode, press 5 times to enter plug and charge mode; Note: plug and charge mode: automatically confirmed charging after the connection is confirmed.	Beep twice	If you want to cancel the plug and charge mode，click schedule in the APP
Wifi Reset and Configuring URL/ID/APN	On standby statue, press and hold for more than 10 seconds to 1.Reset the WiFi, then re-add the device for pairing connection; 2.**Configure URL/ID/APN using Ethernet by PC**	Beep twice	1.The charger will need to be readded to the APP 2.Restart the product power supply

RFID

RFID function, you need to make sure that the connector is connected to the electric vehicle. In the connection confirmation mode, tap your card in the RFID area of the charger to start charging, and then tap your card in the RFID area again to stop charging.
Note: After starting and stopping charging once, tapping your card in the RFID area in connection confirmation mode will not continue to charge. If you want to continue charging, you need to unplug the connector and reconnect to the electric vehicle.

USER INSTRUCTIONS

TELECOMMUNICATION

This product complies with the OCPP1.6J service protocol. After you set the URL and ID by the Phone/PC,
To set the URL and ID:
1(phone): Refer to the “setting” by APP ; or
2(PC): Refer to "Configure URL/ID/APN using Ethernet".
The network is connected to the Ethernet interface / WIFI, the product will automatically connect to the server to realize backstage control.
Ethernet interface:Refer to the “**Network Connection guide**”
WIFI: Refer to the "**setting**" by APP.

POWER MANAGEMENT INSTRUCTION

Product with power management function can self-regulate the output current to keep the total household electricity load not exceeding the total household current.
Note: For three phase If the current values of the three live wires monitored by the three-phase power are not equal, the product will calculate the minimum output current by itself, and the three output lines will be executed according to this minimum output current;
To set the maximum power after the product is connected to the WIFI, open the APP and go to settings and then input numerical value into "DLB value" . For detailed settings, please refer to “DLB value”.

EV CHARGER GROUP MANAGEMENT MODEL

The EV charger group management model refers to the unified charging management of a number of EV charger. It can monitor, schedule and optimize the charging time, charging capacity and other parameters of multiple EV, ensure the maximum utilization rate of charging facilities, and ensure that users' charging needs are met, which can effectively realize the smooth operation of regional distribution networks and reduce the charging cost of power systems.
Note: Refer to **“EV charger group management model guide”**

PEN FAULT PROTECTION

The Protective Neutral and Earth (PEN) conductor refers to part of the electricity cable to the property. If this conductor is damaged there is a danger that the chassis of the electric vehicle being charged will become “live” and cause an electric shock. BS7671:2018 Amendment 1:2020 part 722.411.4.1 requires that extra protection is provided to prevent an electric shock – either by fitting an extra earth electrode or through a device which detects the fault and disconnects the supply.
It has this protection RCD2 and will disconnect the output if it detects a problem with the PEN conductor or detects that there may be any electric current flowing through the chassis of the EV. This PEN fault protection means that there is no need to install an earth electrode with the unit.
If the unit detects a problem with the PEN conductor then the red light flasing two fast, two slow !